REAR NO.2 SEAT

COMPONENTS
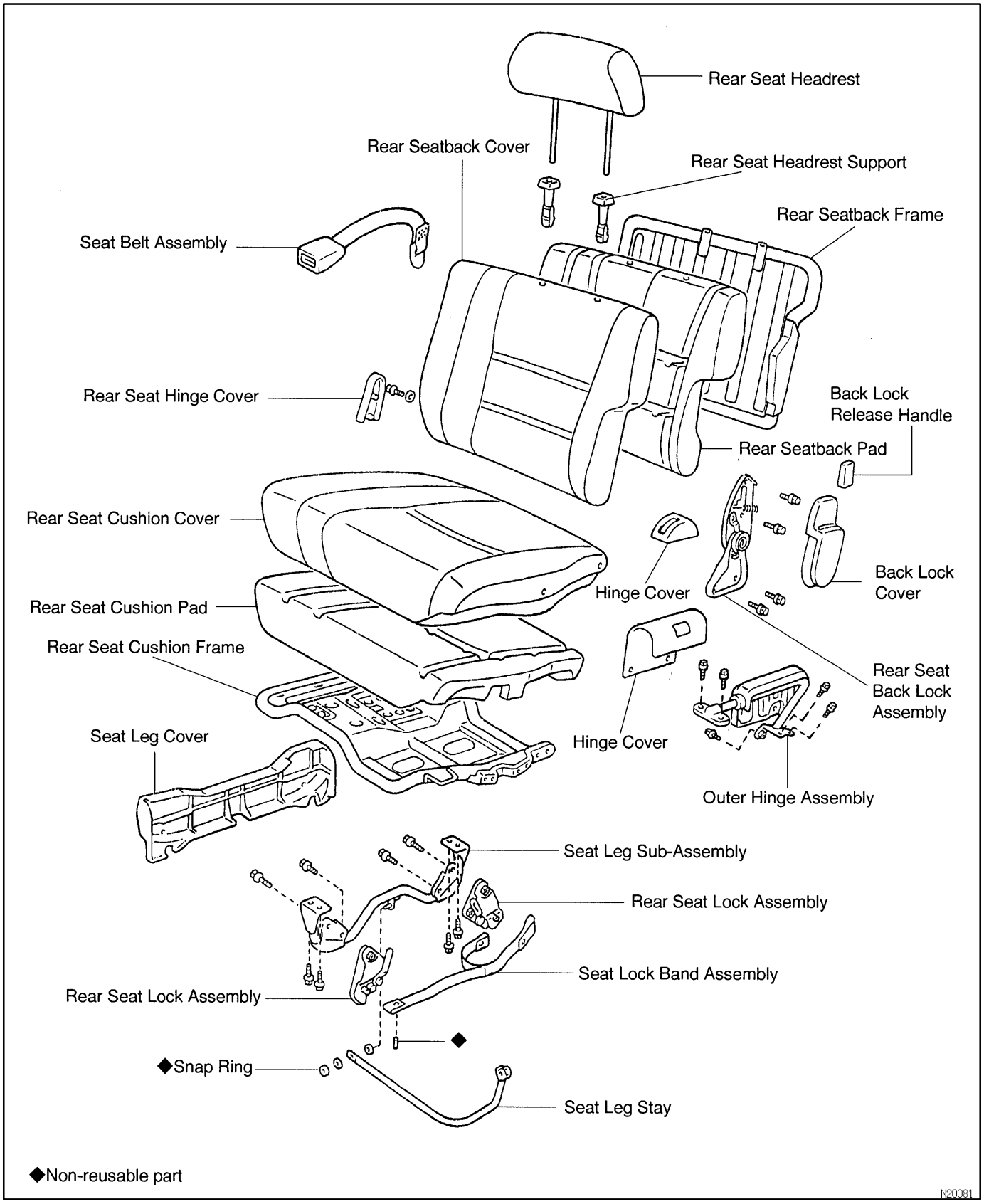
BO39K-01